Schematic.SchDoc

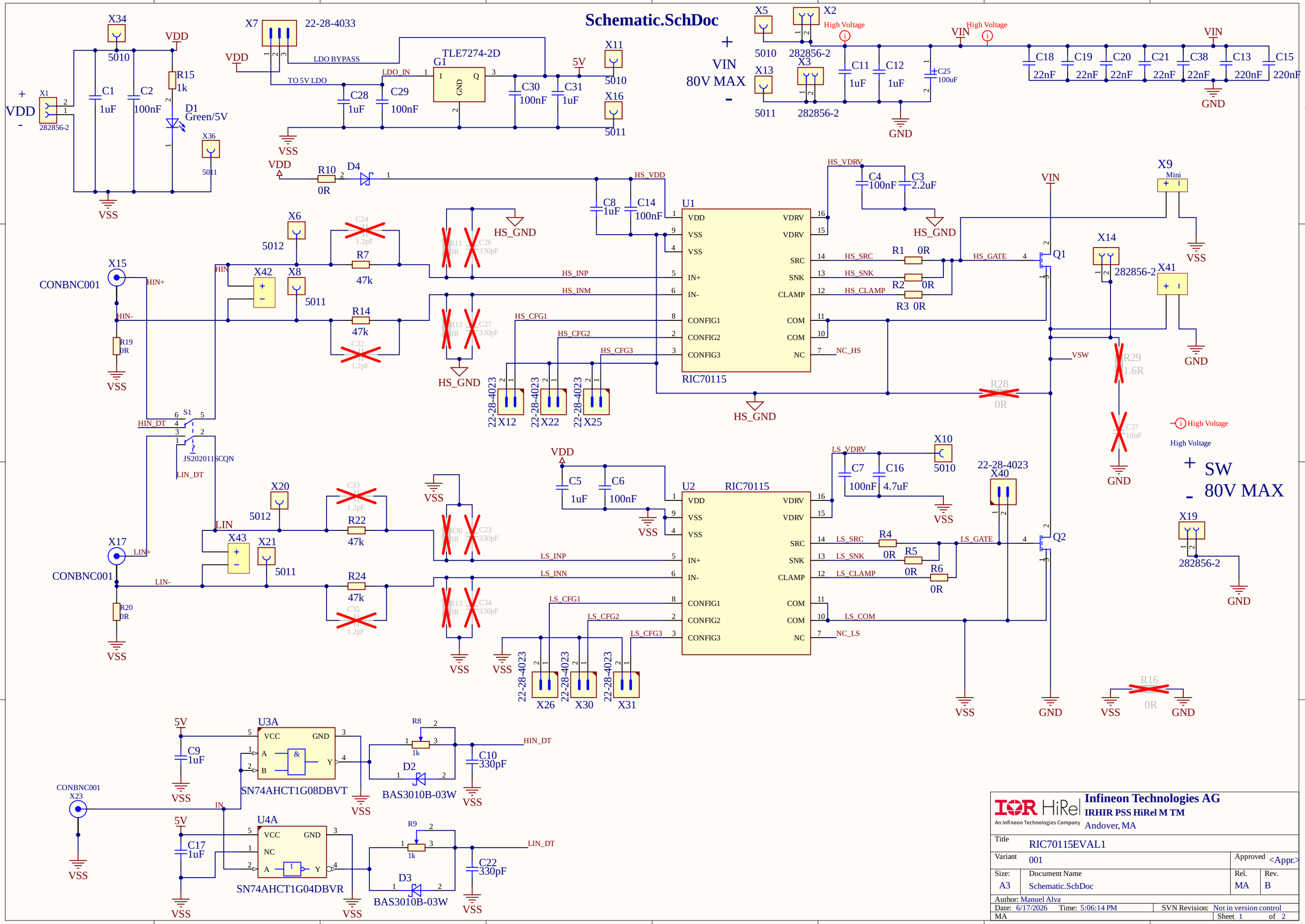

Infineon Technologies AG	IRHIR PSS HiRel M TM
An Infineon Technologies Company	Andover, MA
Title	RIC70115EVAL1
Variant	001
Approved	<Appr.>
Size: A3	Document Name: Schematic.SchDoc
Rel.	MA
Rev.	B
Author:	Manuel Alva
Date:	6/17/2026 Time: 5:06:14 PM
SVN Revision:	Not in version control
MA	Sheet 1 of 2

Hardware.SchDoc

Fiducial Markers

E1 E2 E3

MP1 MP2 MP3 MP4



9434 9434 9434 9434

MP5 MP6 MP7 MP8



1903C 1903C 1903C 1903C

Infineon Technologies AG
IRHIR PSS HiRel M TM
Andover, MA

Title	RIC70115EVAL1		
Variant	001	Approved	<Appr.>
Size: A3	Document Name: Hardware.SchDoc	Rel. MA	Rev. B
Author: Manuel Alva			
Date: 6/17/2026 Time: 5:06:14 PM	SVN Revision: Not in version control		
MA	Sheet 2 of 2		

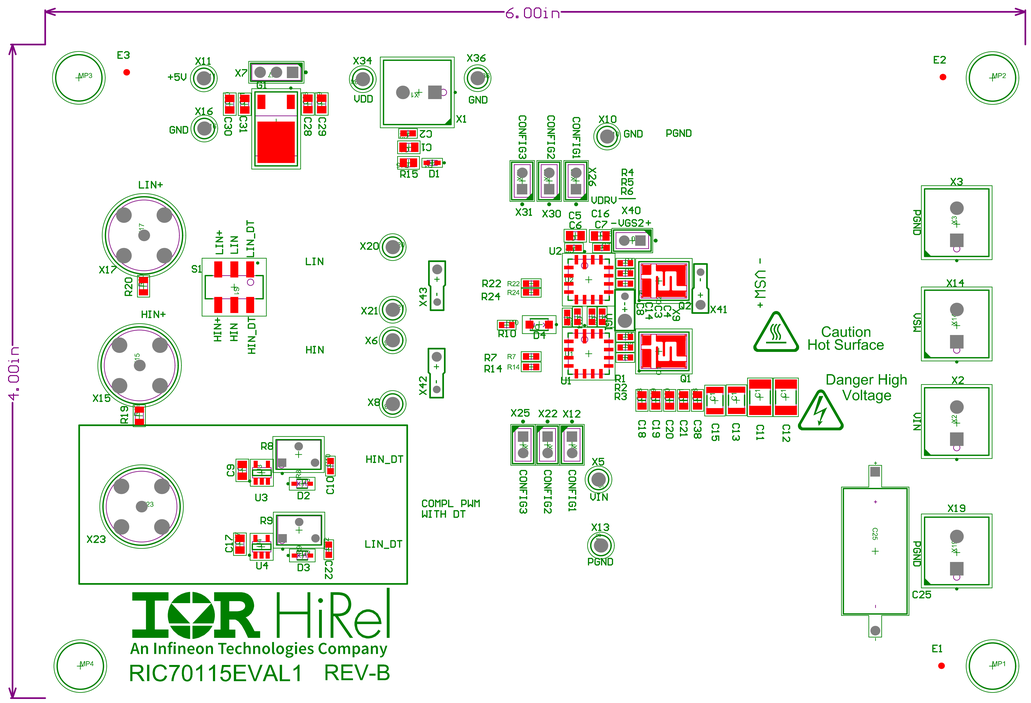

IOR HiRel An Infineon Technologies Company Infineon Technologies AG IRHR PSS HiRel M TM 101 N Pacific Coast Highway El Segundo, CA 90245	ENGINEER:	TITLE: RIC70115EVAL1	
	PCB DESIGNER: Manuel Alva		
	DATE: 6/17/2026	PART NO.:	REL: _PRJ_PCB_Release B / REV:
	SVN REVISION: Not in version control	FILE NAME: PCB1.PcbDoc	APRV: JH / SCALE: 1:1

© Infineon Technologies AG 2023. All Rights Reserved

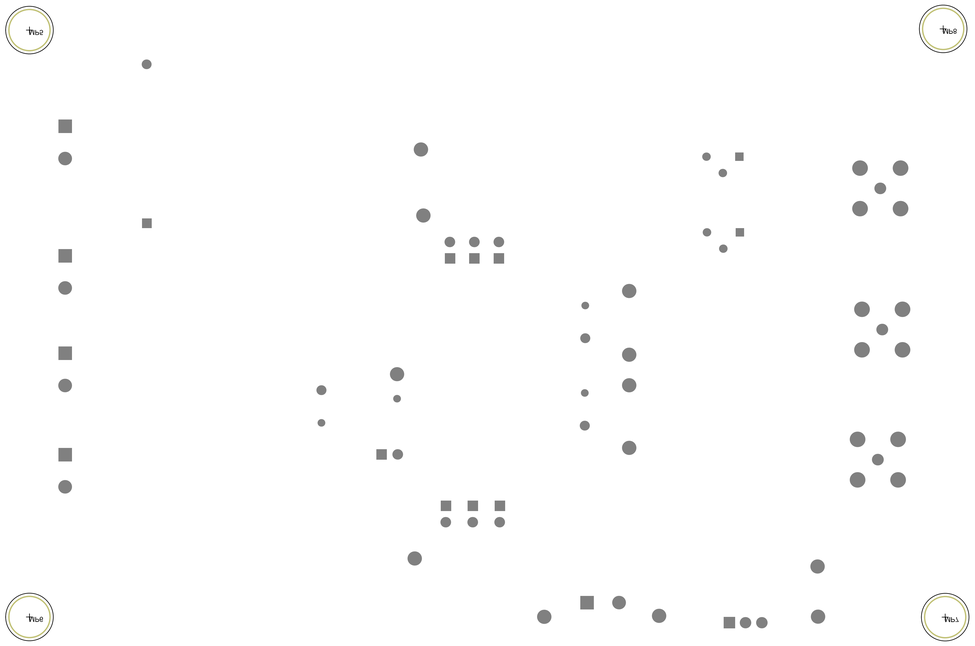

Layer	Name	Material	Thickness	Constant	Board Layer Stack
	Top Overlay				
	Top Solder	SM-001	1.00mil	4	
1	Layer 1	CF-005	2.76mil		
	Dielectric 1	PPA-013	10.00mil	4.3	
2	Layer 2	CF-004	2.76mil		
	Core	Core-043	30.18mil	4.3	
3	Layer 3	CF-004	2.76mil		
	Dielectric 2	PPA-013	10.00mil	4.3	
4	Layer 4	CF-005	2.76mil		
	Bottom Solder	SM-001	1.00mil	4	
	Bottom Overlay				
	Total board thickness:		63.20mil		

© Infineon Technologies AG 2023. All Rights Reserved

TOR HiRel

An Infineon Technologies Company

Infineon Technologies AG
IRHIR PSS HiRel M TM
101 N Pacific Coast Highway
El Segundo, CA 90245

ENGINEER:		TITLE:	
PCB DESIGNER:	Manuel Alva		
DATE:	6/17/2026	PART NO.:	REF: PRJ_PCB_Release B
SVN REVISION:	Not in version control	FILE NAME:	APRV: JH
		PCB1.PcbDoc	SCALE: 1:1